Malco Gutter Outlet Punches

A Complete System for K-Style Gutter!

For cutting downspout drop holes in K-style aluminum gutter, nothing else matches the speed and accuracy of the Malco Gutter Outlet Punch System. A versatile, lightweight Malco Tool Frame accepts your choice of separate Malco Rectangular and X-style Punch and Die combinations, including ***a NEW 3-in. X 4-in. (76 x 102 mm) X-Style Punch and Die!***

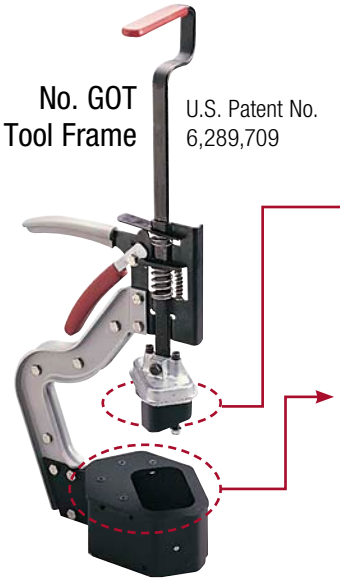

New Punch & Die

No. GOP34XUK (X-Style)
Punch & Die Assembly

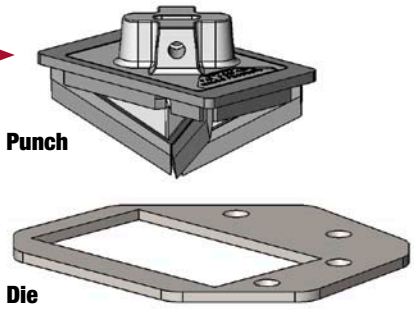

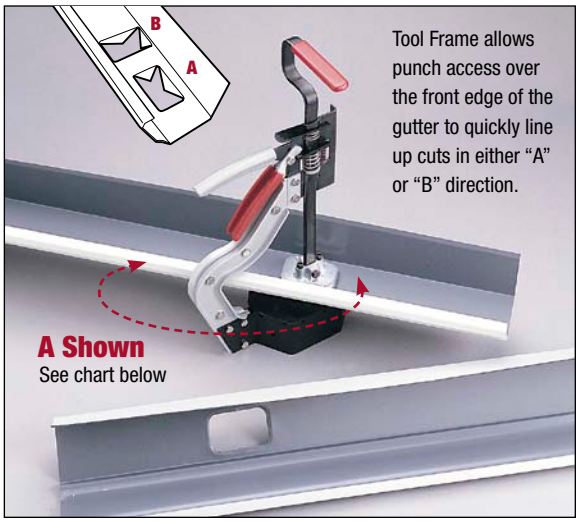

Use the lightweight aluminum and steel tool frame and the punch and die combination of choice to cut a clean drop hole anywhere along the length of standard 5 or 6-inch K-style aluminum gutter up to .032-in (0.81 mm) thickness. The tool frame features ample throat clearance and open sides to allow the punch access over the front edge of the gutter and quickly line up cuts in either "A" or "B" direction. The tool frame's easy ratcheting mechanism, and the angled blades of the punch, combine to provide a smooth cutting action. A built-in ejector on the frame safely removes the metal slug from rectangular cuts. High carbon steel blades ensure long punch life, and the blades are also separately replaceable. Heat treated components and weather resistant finishes on both the tool frame component and all punch and die assemblies ensure long service life. Fastener holes are provided in the tool base for bench-mount operation.

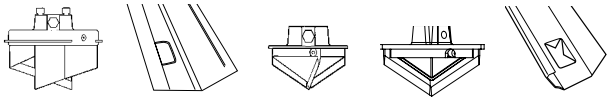

GOP34UK | GOP23UK GOP34UK | GOP23XUK | New GOP34XUK | GOP23XUK GOP34XUK

Reference Chart

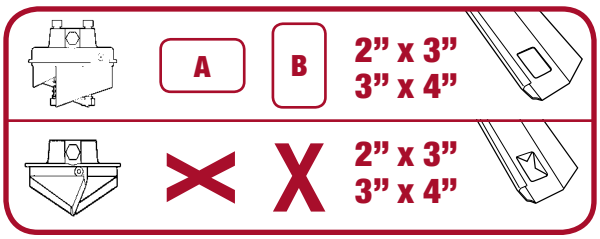

Specifications

Gutter Outlet Tool Frame

Catalog Number	Dimensions in. (cm)	Nominal Tool Weight w/ Punch & Die Added lbs (kg)
GOT	19 x 10 (48 x 25)	8.0 (3.63)
GOTRC	Replacement Chocks	—

Punch & Die Assemblies

Catalog Number	Description	Dimensions in. (mm)
GOP23UK **GOPRB**	Standard Rectangle Replacement Blade for GOP23UK	2 x 3 (51 x 76)
GOP34UK	Standard Rectangle / Replacement Blade	3 x 4 (76 x 102)
GOP23XUK **GOP23XRB**	X-Style Replacement Blade for GOP23XUK	2 x 3 (51 x 76)
GOP34XUK **GOP34XRB**	***New*** X-Style Replacement Blade for GOP34XUK	3 x 4 (76 x 102)

- *Ejector built into Tool Frame safely removes metal slug from rectangular cuts.*
- *Punch blades are easily replaceable.*
- *Extra holes in base of Tool Frame allow for secure bench-mount operation.*

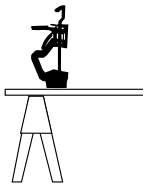

SL15103

Malco Products, Inc. | Annandale, Minnesota, U.S.A. | www.malcotools.com | ©2012
U.S. 320-274-7387 - 800-328-3530 | Canada: 320-274-2376 • 800-219-1085 | International: 01-320-274-2376